Deep Architectures for Modulation Recognition

Nathan West
US Naval Research Laboratory
Oklahoma State University

Tim O'Shea
Virginia Tech
Deep Sig Inc.

Presented at IEEE DySPAN 2017
March 6, 2017

Meta conversation

My “Battle of the Modrec” workshop submission is based on results from this

So far I’ve heard many complaints of people previously bringing modrec results to DySPAN on some (what?) data, claiming success, then disappearing.

Sorry. Hopefully you won’t think I’m doing that.

Applying naive learning techniques to RF seems like a hot topic this week. I’d like to open the tail end of this up for discussion as well as questions

Initial Questions

Provided a CNN has outperformed expert feature based methods for modulation recognition:

- Why use 2 convolutional layers?
- Why use 1x3 and 2x3 filters?
- What about time relationships between samples/symbols?
- Are those accuracy vs SNR curves the right shape?
- What is the model actually doing?

Training parameters

- RadioML 2016.10 dataset (https://radioml.com/datasets/radioml-2016-10-dataset/)
  - Train: 72%
  - Validation: 8%
  - Test: 20%
- Generally stick with adam optimizer
- 128 complex samples/classification

CNN

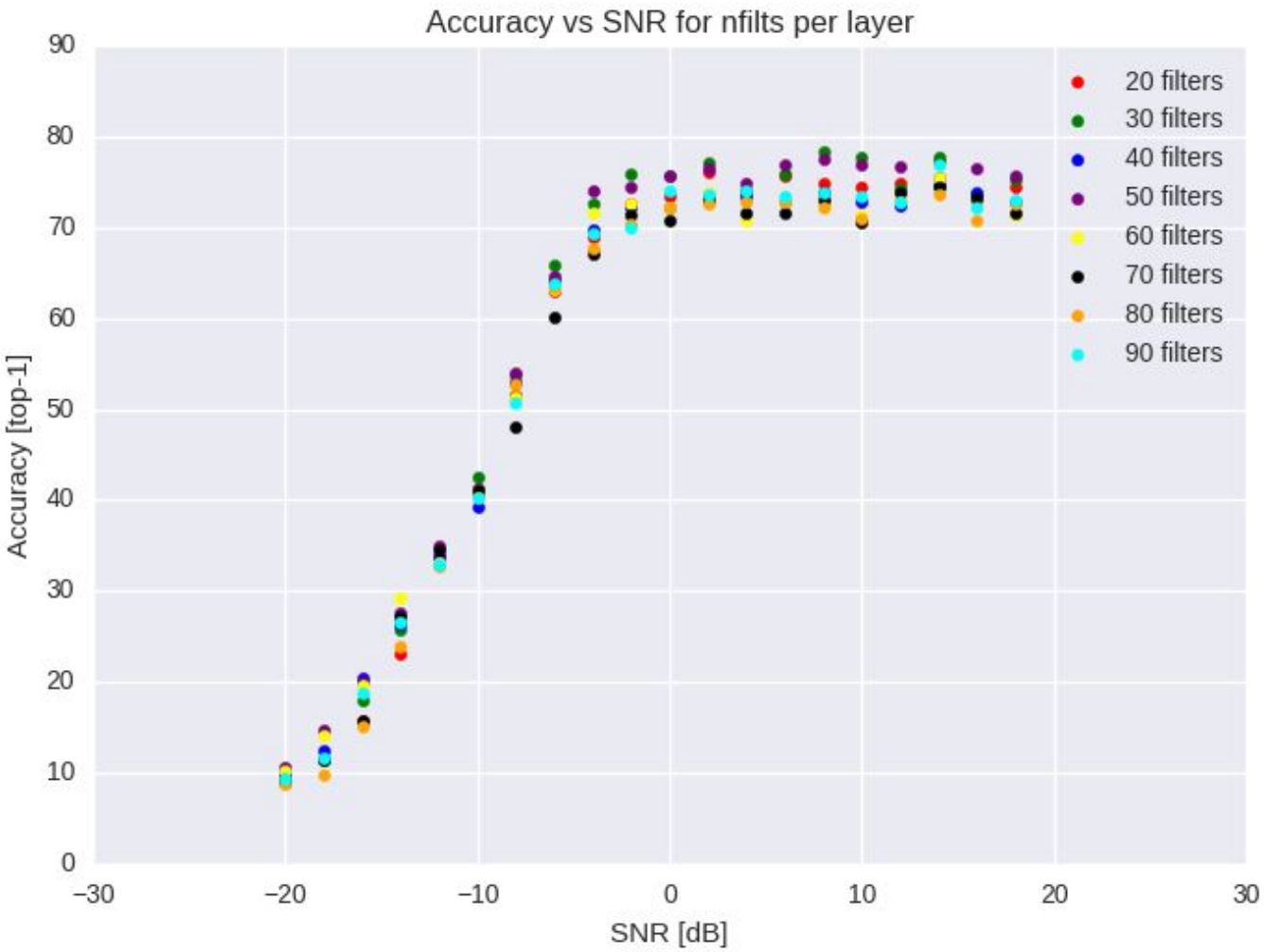
Accuracy vs SNR for nfilts per layer
Accuracy [top-1]
SNR [dB]
0
10
20
30
40
50
60
70
80
90
−30
−20
−10
0
10
20
30
20 filters
30 filters
40 filters
50 filters
60 filters
70 filters
80 filters
90 filters

CNN

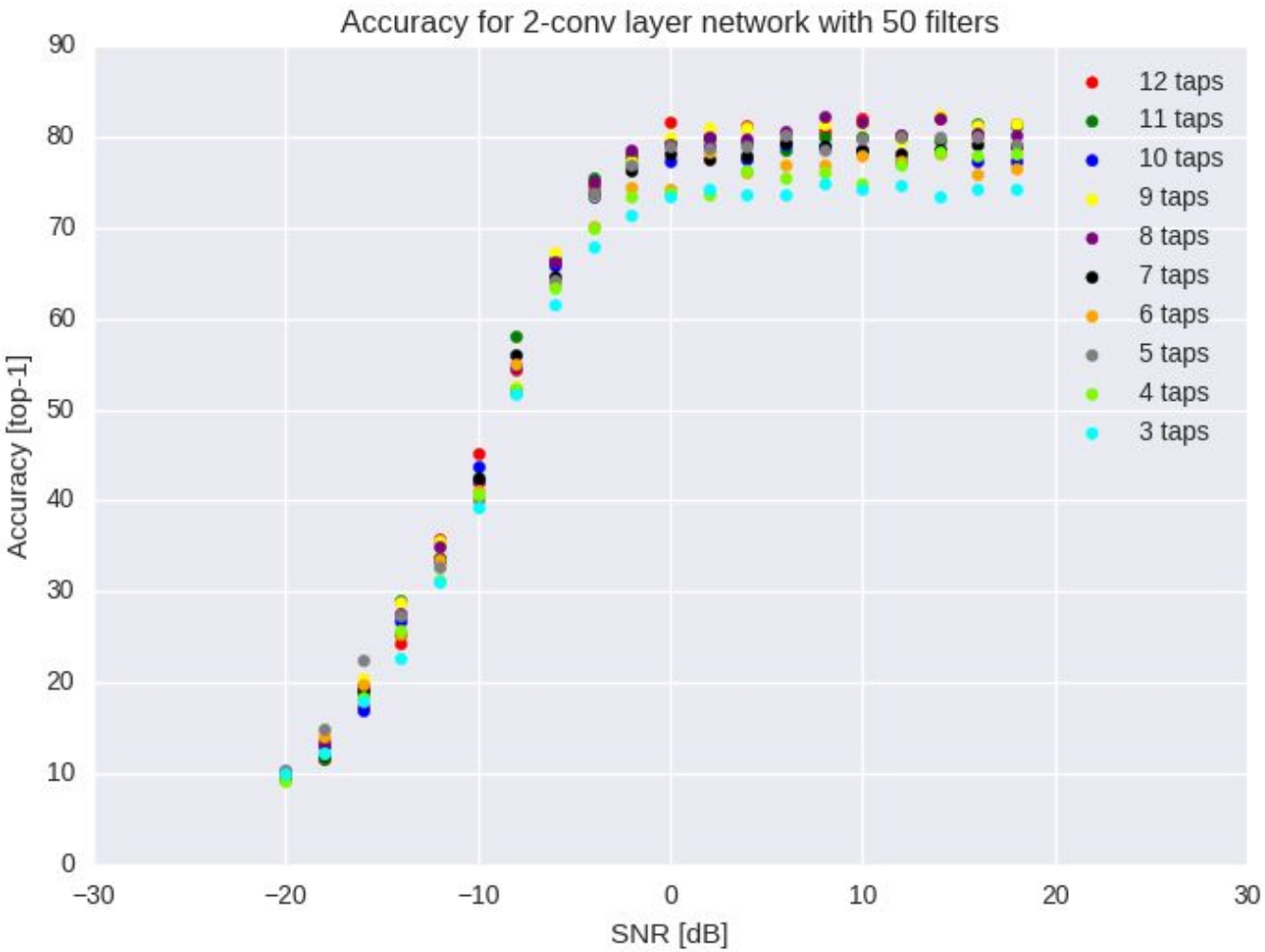
Accuracy for 2-conv layer network with 50 filters
Accuracy [top-1]
SNR [dB]
0
10
20
30
40
50
60
70
80
90
−30
−20
−10
0
10
20
30
12 taps
11 taps
10 taps
9 taps
8 taps
7 taps
6 taps
5 taps
4 taps
3 taps

CNN

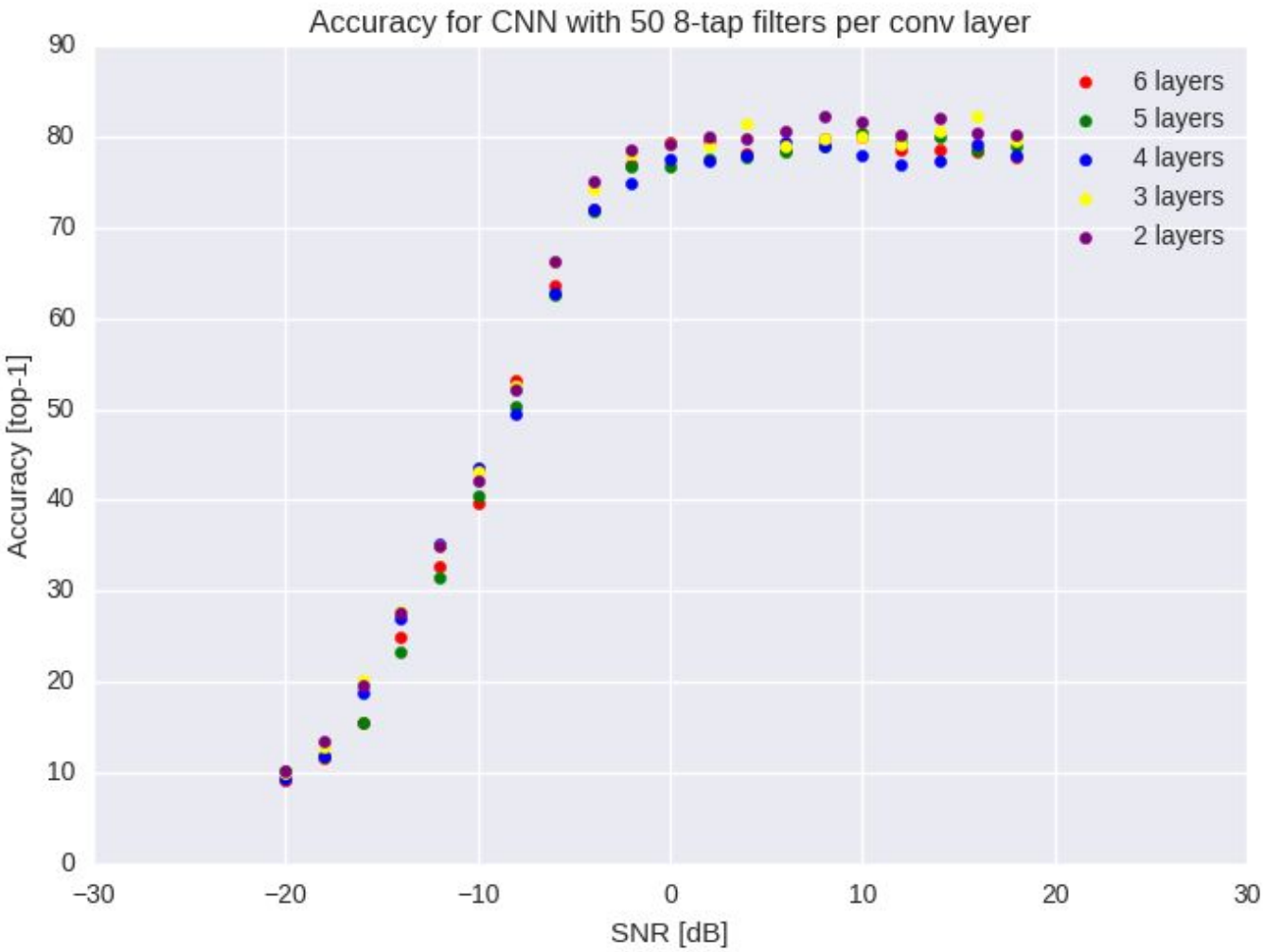
Accuracy for CNN with 50 8-tap filters per conv layer
Accuracy [top-1]
SNR [dB]
0
10
20
30
40
50
60
70
80
90
−30
−20
−10
0
10
20
30
6 layers
5 layers
4 layers
3 layers
2 layers

Resnets

- Initially created to solve “vanishing gradient”
- Current theory is that it provides identity function to reduce complexity

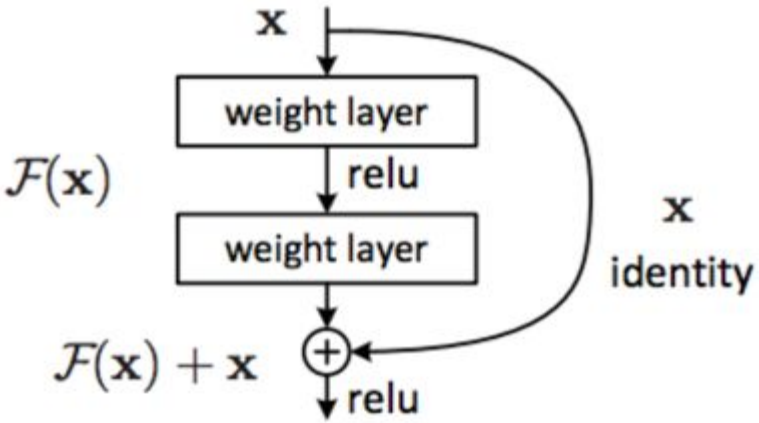

Inception Modules

- We don’t know what the right size convolutions are
- Salient feature maps will come through, non-salient vanish
- Perhaps an input feature map contains different sized features

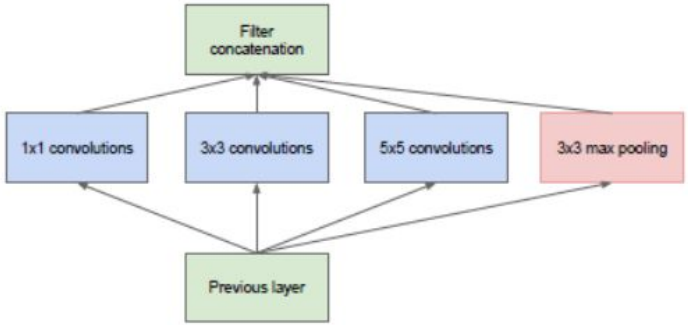

(a) Inception module, naïve version

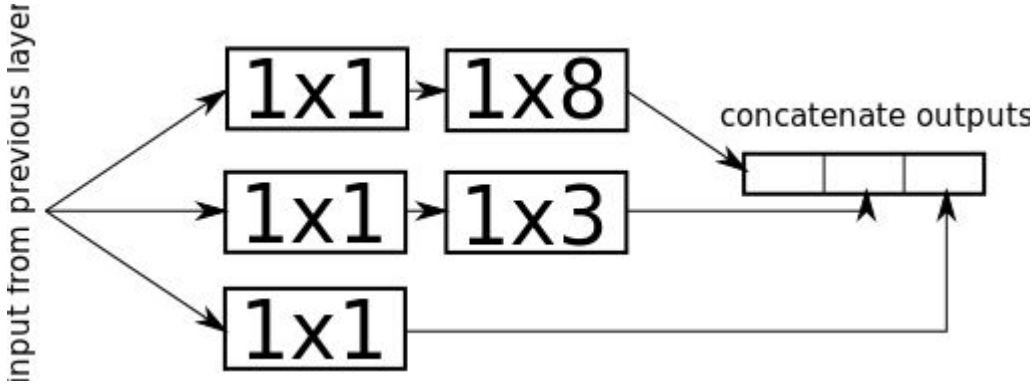

CLDNN

First used in voice research to train against raw time samples rather than cepstrums

Take various forms depending on which paper you read

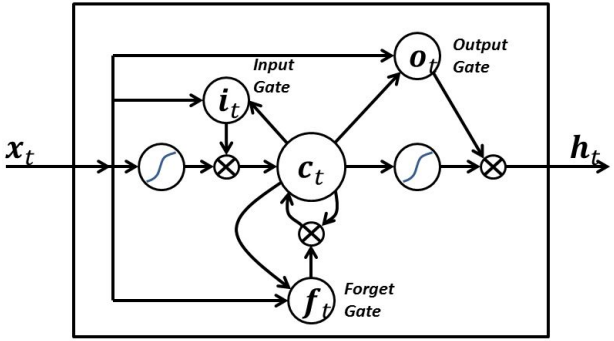

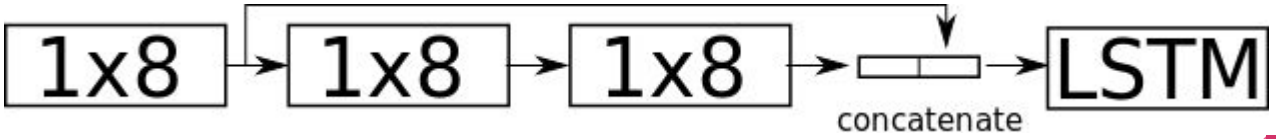

Best Performance compared to “An Introduction to Communication Systems”

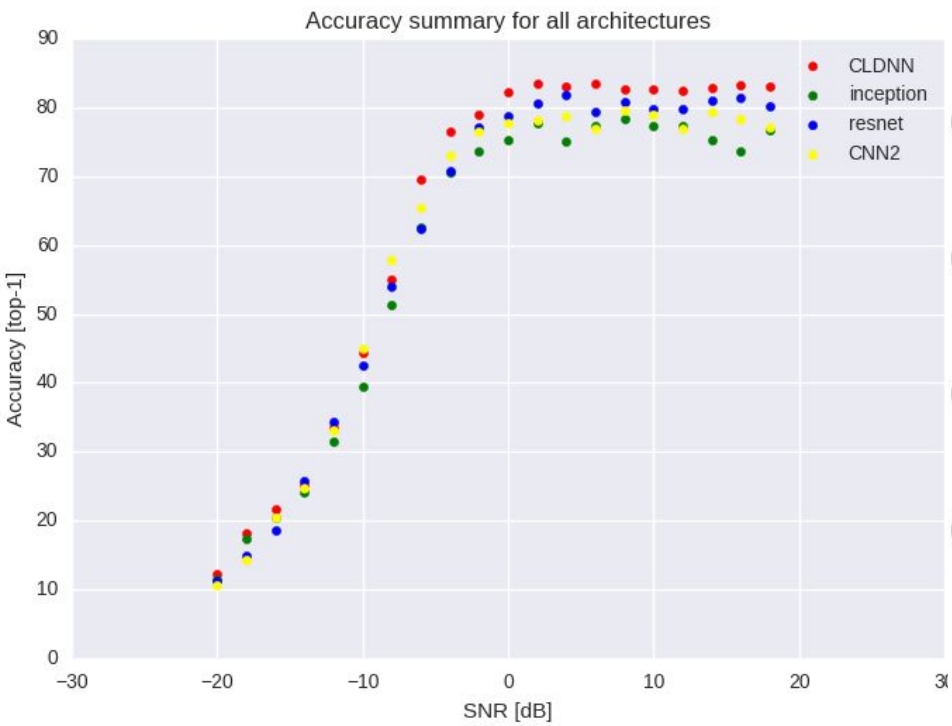

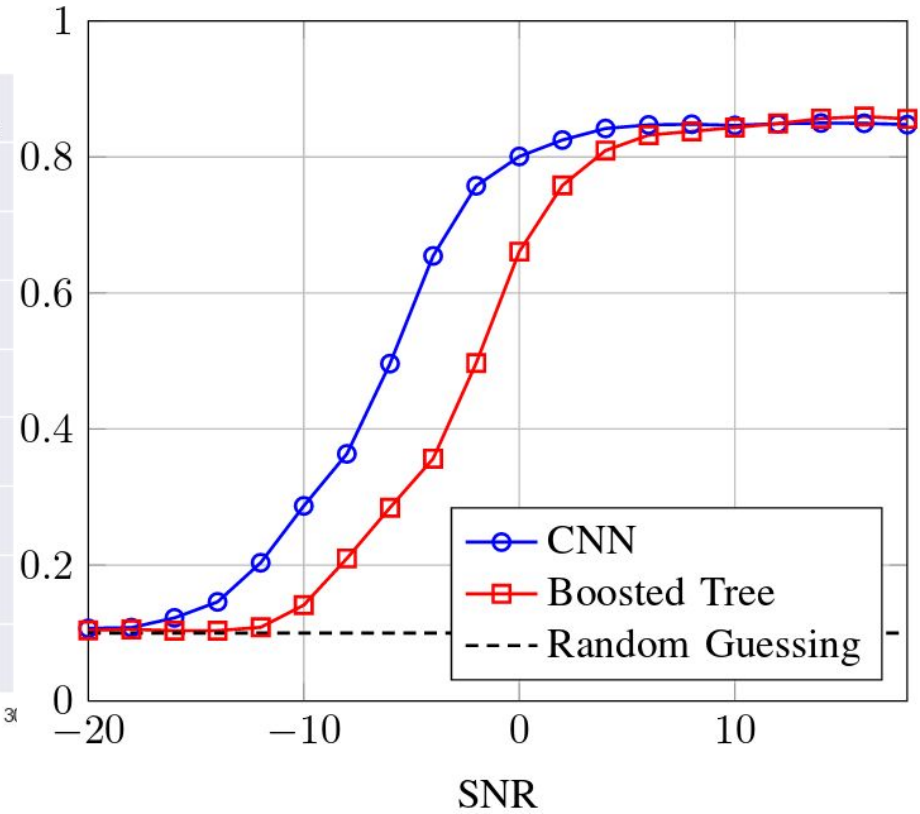

*** Slightly different datasets. “An introduction to communication systems uses the same generator with more vectors and no WBFM

Learned features

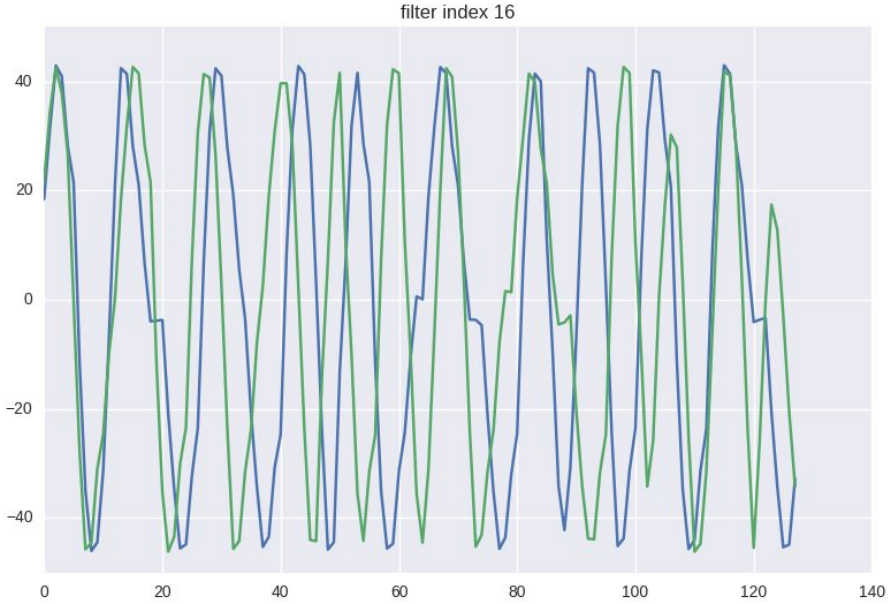

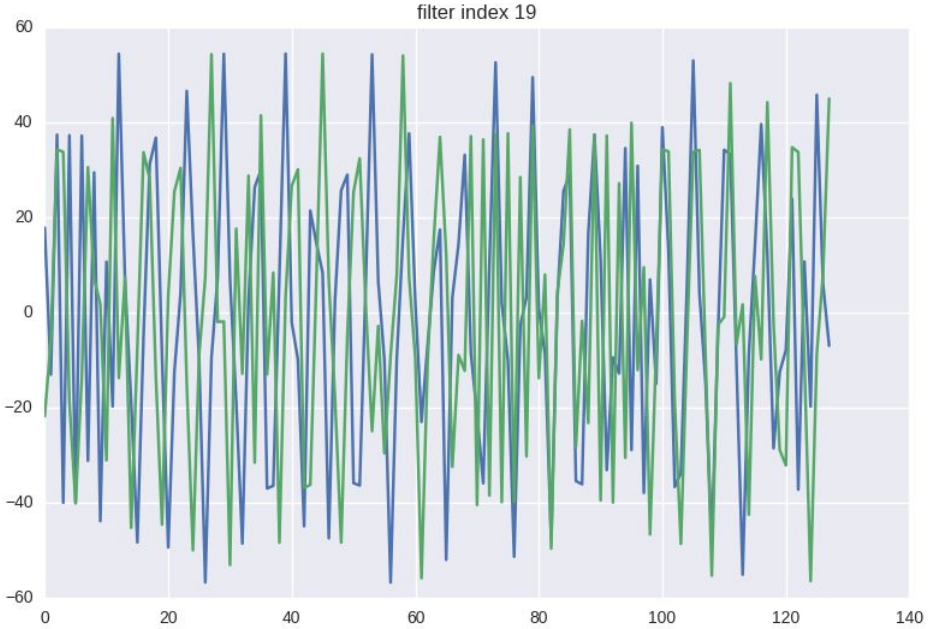

Conclusions

- Domain **does** matter for neural net architecture
- Advances from other domains won’t necessarily help us
- Machines can learn useful features from I/Q time samples of RF data (we already knew this)
- Expert knowledge **did** help us design parts of the network

Concluding Questions

- What does an RF-specific neural net look like?
- Still not entirely sure what networks are learning